10. EXPLODED VIEW

10-1.THE EXPLODED VIEW OF CABINET ASSEMBLY

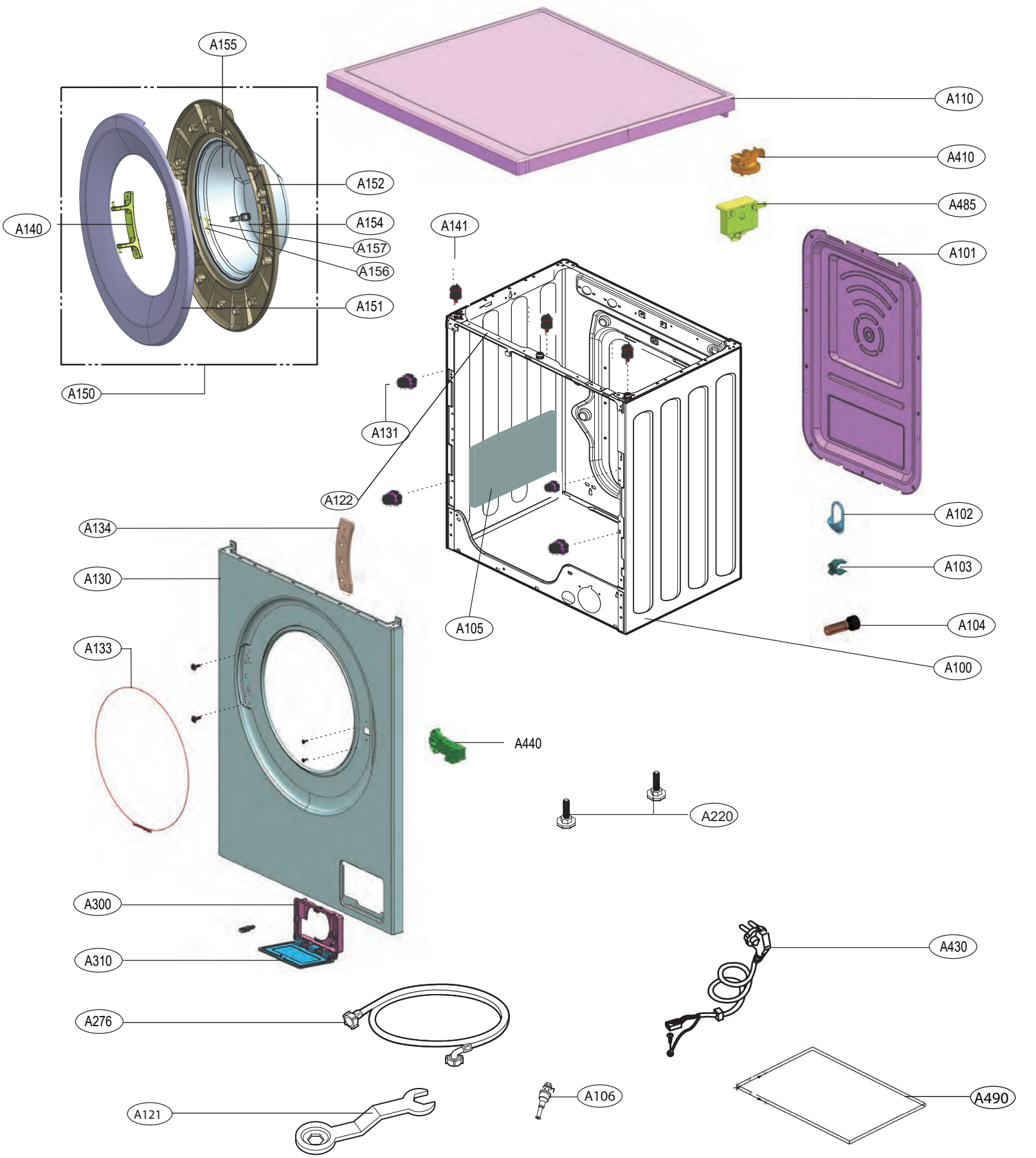

10-2 THE EXPLODED VIEW OF CONTROL PANEL & DISPENSER ASSEMBLY

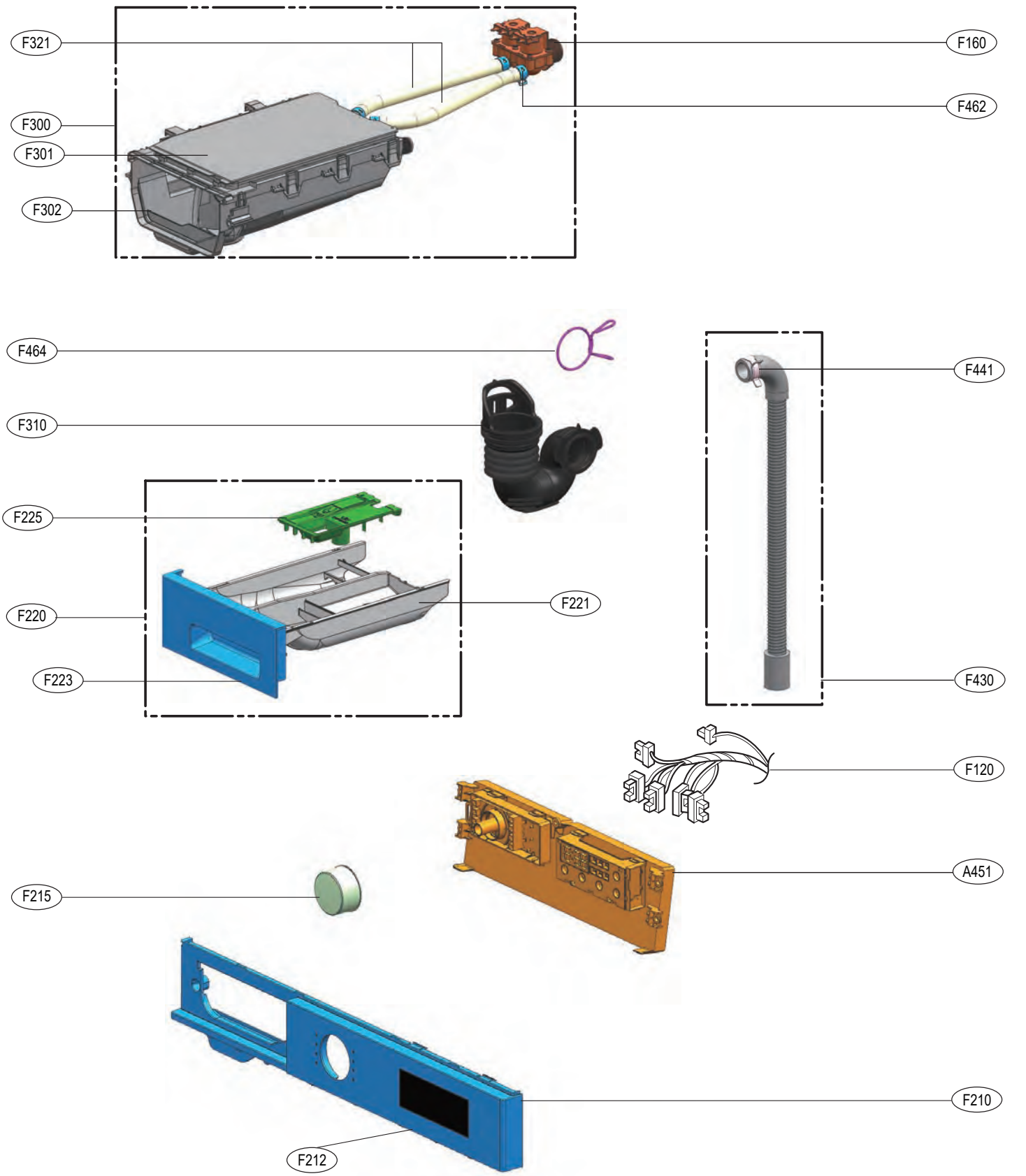
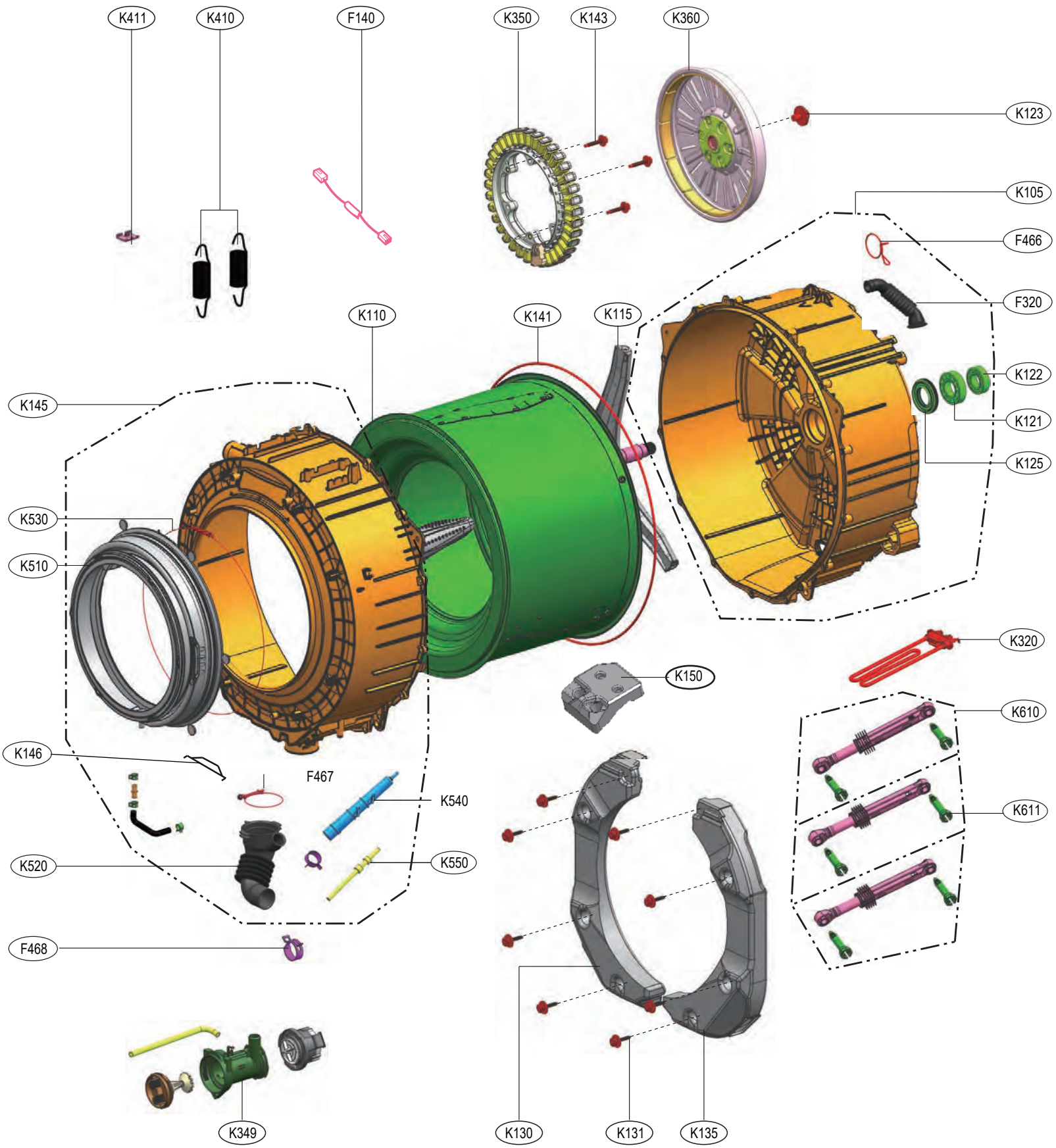
10-3 THE EXPLODED VIEW OF DRUM & TUB ASSEMBLY